PRECI-FLEX® Adapter 20, Whistle Notch short Standard DIN1835-E8

Part Number 2005-0122

Scope of Delivery **Fixing Screws 0.000.770**
O-Ring 15703

AccessoriesScrew Driver 0.001.075

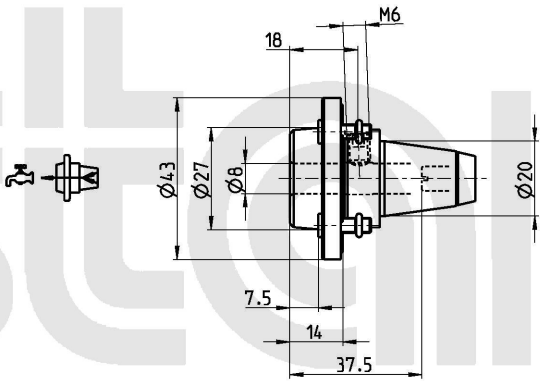

Technical Data Subject to Change

24.08.2012	24.08.2012

www.star-tools.eu